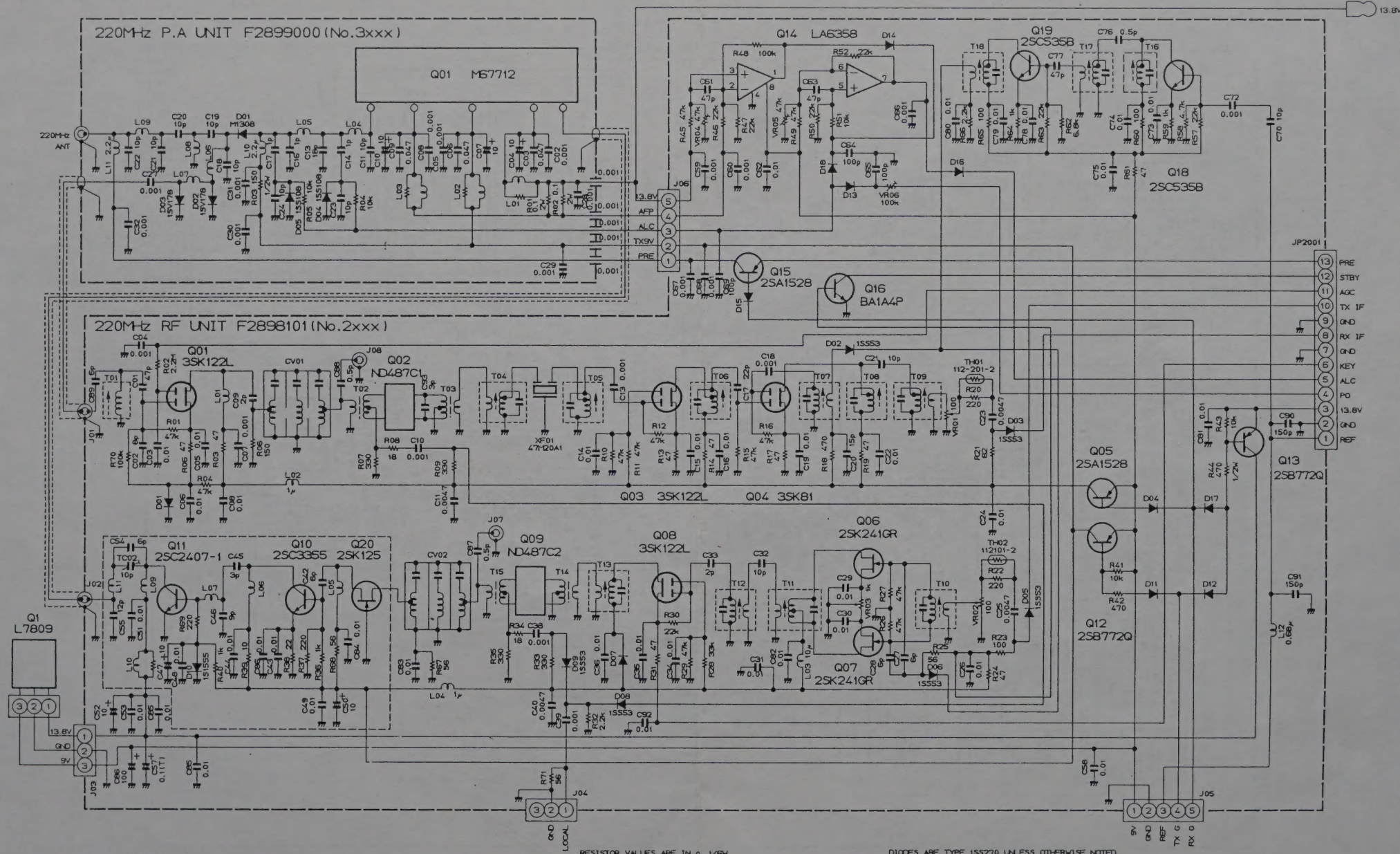

RESISTOR VALUES ARE IN Ω. 1/6W
CAPACITOR VALUES ARE IN μF.
INDUCTOR VALUES ARE IN HENRIES. UNLESS OTHERWISE NOTED.

DIODES ARE TYPE 1SS270 UNLESS OTHERWISE NOTED.
(T)CAPACITORS ARE TANTALUM.
(sr)CAPACITORS ARE SEMICONDUCTOR CERAMIC. 25wv.

E 3 0 0 5 3 0 1

FEX-736-220
Circuit Diagram

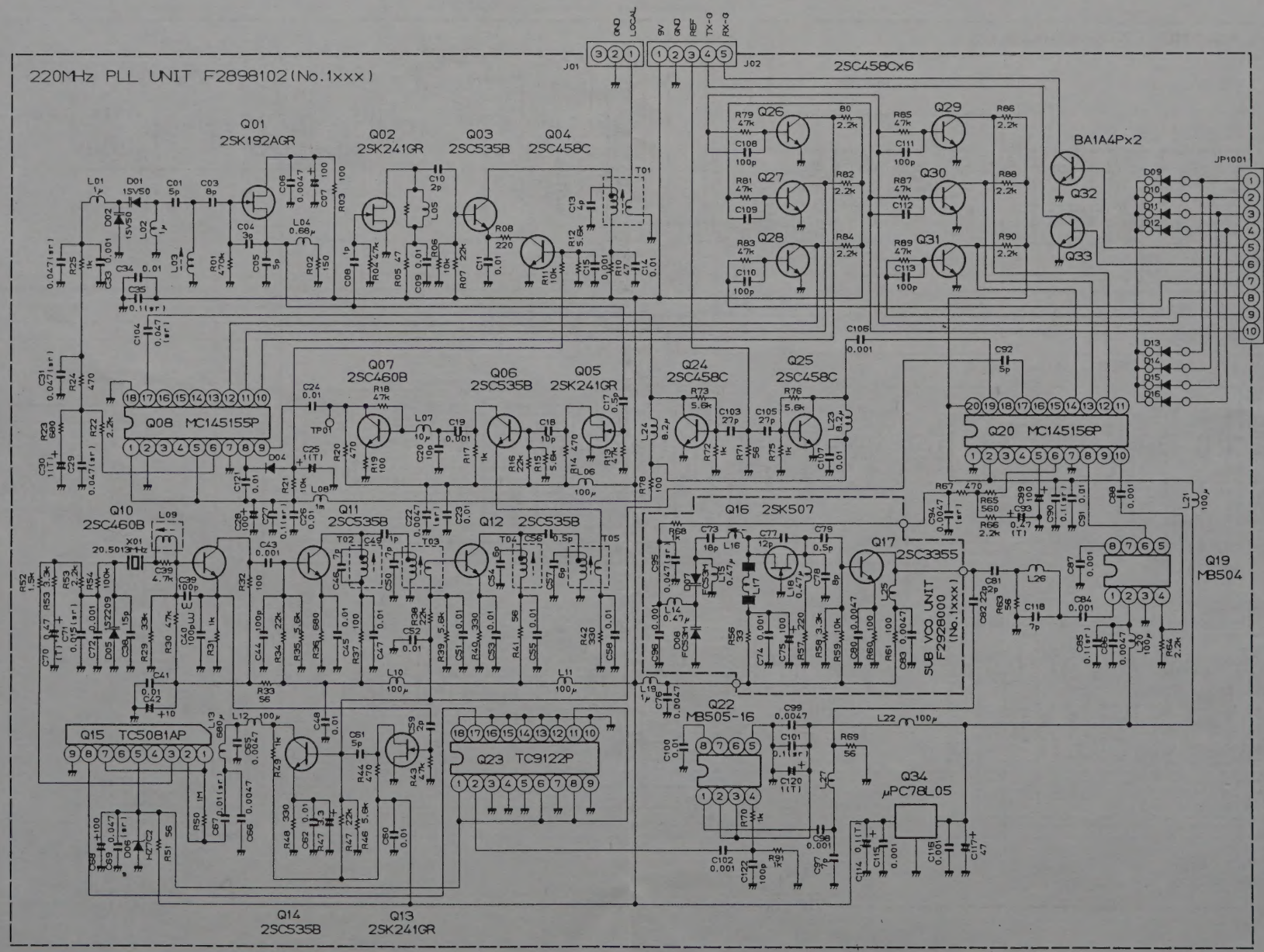

RESISTOR VALUES ARE IN Ω. 1/6W:
CAPACITOR VALUES ARE IN μF.
INDUCTOR VALUES ARE IN HENRIES. UNLESS OTHERWISE NOTED.

DIODES ARE TYPE 1SS270 UNLESS OTHERWISE NOTED.
(T)CAPACITORS ARE TANTALUM.
(sr)CAPACITORS ARE SEMICONDUCTOR CERAMIC. 25wv: